Pilot-operated non-return valve, Series NR02

Compressed air connection type: Internal thread
Compressed air connection type 2: External thread
Min. ambient temperature: -20 °C
Max. ambient temperature: 80 °C
Min. working pressure: 0.5 bar
Max. working pressure: 10 bar



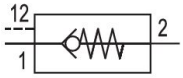

Input	Compressed air connection type input	Output	Qn 1 > 2 [l/min]	Part No.
G 1/8	External thread	G 1/8	300	0821003050
G 1/4	External thread	G 1/4	680	0821003051

Dimensions

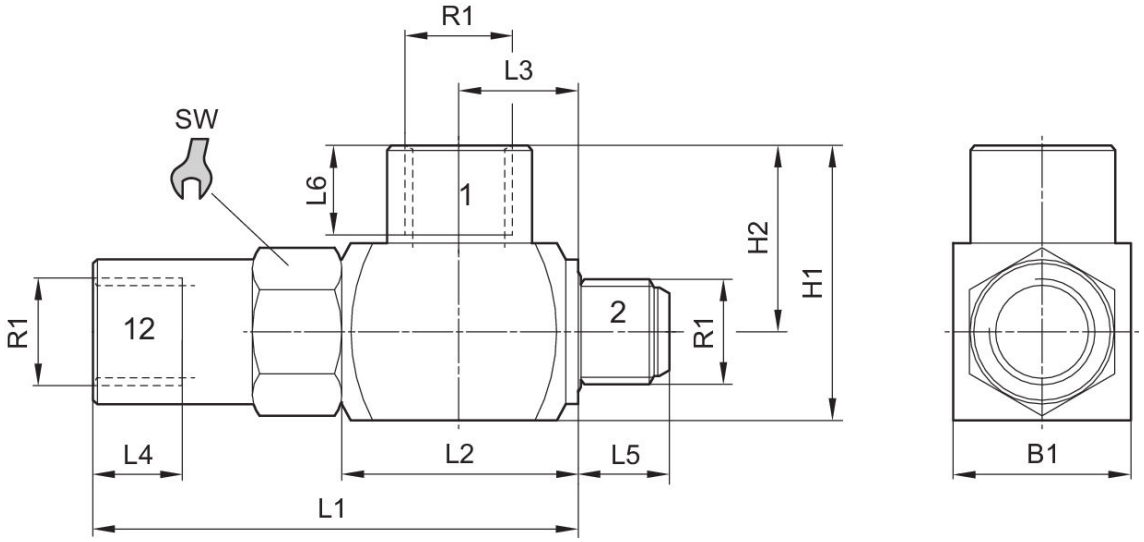

	R1	L1	L2	L3	L4	L5	L6	H1	H2
0821003050	G 1/8	50.5	25.4	12.7	8	7.5	8	24.5	16
0821003051	G 1/4	59.6	29	14.5	12	11.4	12	34	23

	B1	SW
0821003050	17	15
0821003051	22	18